STATE OF ALASKA
49TH
10-18-19
STANLEY G. CRAWFORTH
No. CE13963
REGISTERED PROFESSIONAL ENGINEER

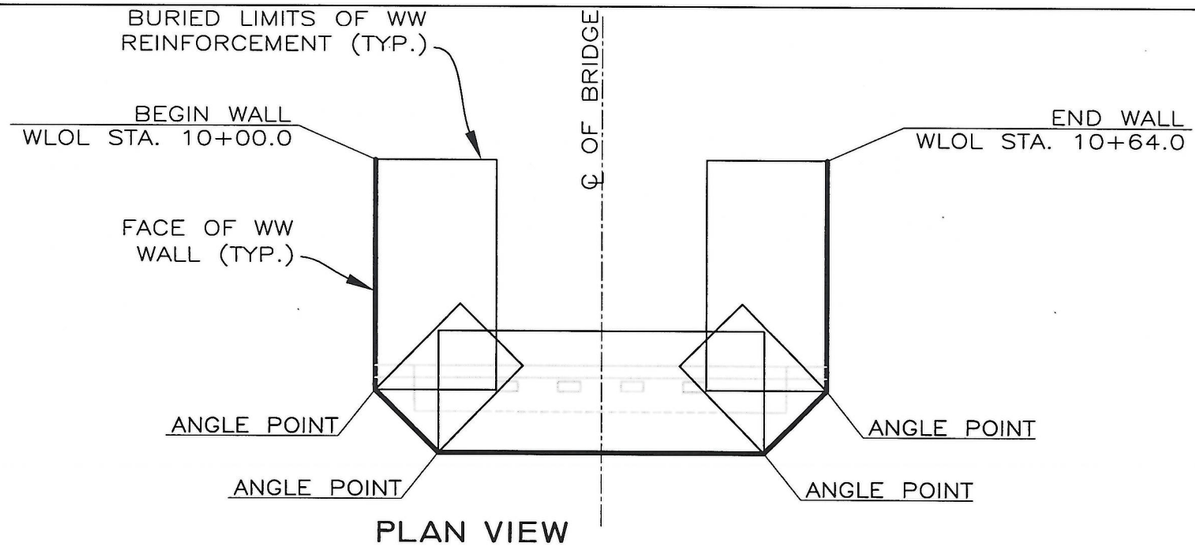

PLAN VIEW
(EAST & WEST ABUTMENTS)
GRAPHIC SCALE

2.5 10
0 5 15
SCALE IN FEET

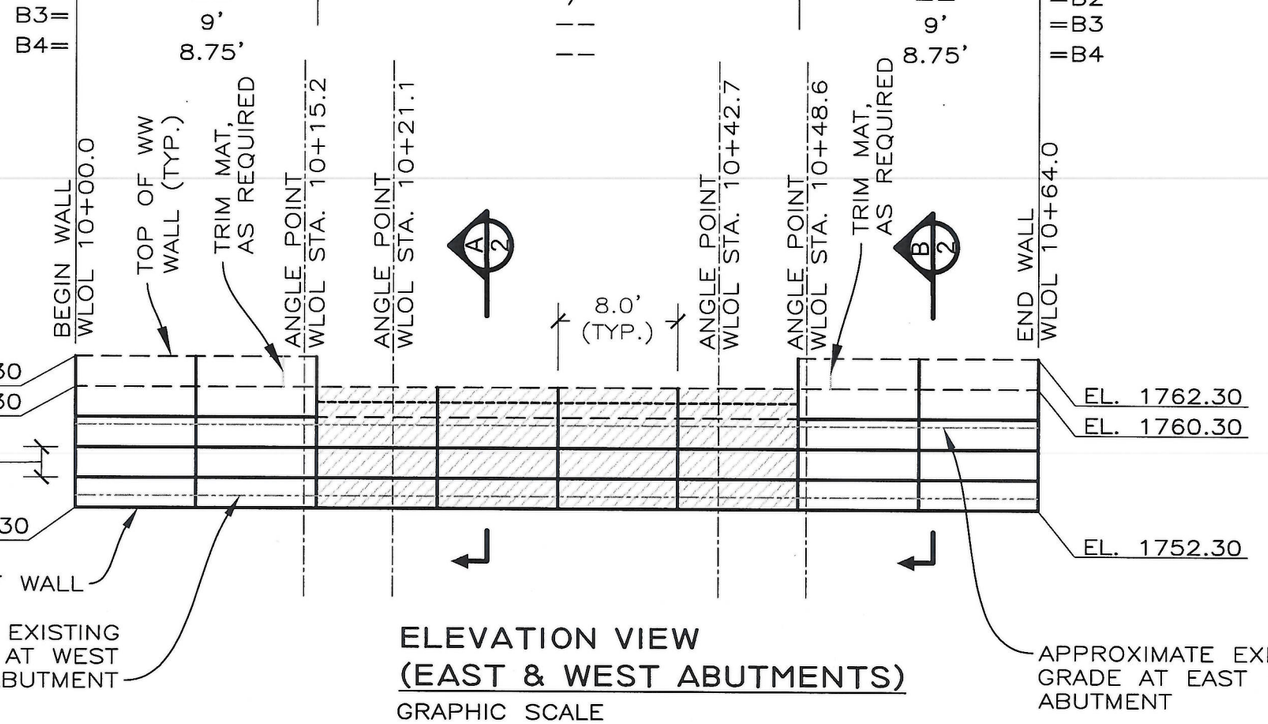

ELEVATION VIEW
(EAST & WEST ABUTMENTS)
GRAPHIC SCALE

LEGEND

B1	8"X12", W7xW3.5–HDG
B2	8"X10.5", W7xW3.5–HDG
B2	8"X10.5", W7xW3.5–HDG (FLAT MAT)
B3	8"X12", W4.5xW3.5–HDG
B4	8"X10.5", W4.5xW3.5–HDG

WLOL	WALL LAYOUT LINE
H	HILFIKER WALL HEIGHT
B	MAT LENGTH
WW	WELDED WIRE

TOTAL SUPPLIED QUANTITY (EAST AND WEST ABUTMENTS)
1,152 S.F.

THIS DRAWING IS FURNISHED SOLELY FOR THE USE OF OR IN CONNECTION WITH THIS PROJECT AND THE PROPRIETARY INFORMATION SHOWN HEREON IS NOT TO BE TRANSMITTED TO ANY OTHER ORGANIZATION WITHOUT SPECIFIC AUTHORIZATION BY THE HILFIKER COMPANY. HILFIKER RETAINING WALLS ARE PROTECTED BY ONE OR MORE OF THE FOLLOWING PATENTS: 243,613; 243,697; 288,616; 4,117,688; 4,329,088; 4,324,505; 4,391,557; 4,505,621; 4,343,318; 4,661,023; 4,859,939; 4,929,125; 5,076,735; 5,647,695; 5,722,799; 5,733,072; 5,357,970B1; 6,874,975B2; 7,033,11882; AND OTHERS. OTHER PATENTS PENDING (2008)

REV.	DATE	BY	DESCRIPTION
0	10/16/2019	SGC	ISSUED FOR REVIEW
1	10/18/2019	SGC	ISSUED FOR SUBMITTAL

CADD: RGV
DESIGNED: RGV
CHECKED: SGC

HILFIKER RETAINING WALLS
1902 Hilfiker Lane
Eureka, CA 95503-5711
TOLL-FREE 800.762.8962
PH 707.443.5093 FAX 707.443.2891
WEB SITE www.hilfiker.com E-MAIL info@hilfiker.com
SINCE 1902 QUALITY PRODUCTS

AMERICAN GEO TECHNICS
American Geotechnics
5260 Chinden Blvd.
Boise, ID 83714
(208) 658-8700
Fax: (208) 658-8703

WW WALL PLAN & ELEVATION
WELDED WIRE WALL
CRIPPLE CREEK CROSSING
AK D.N.R. HEALY, AK

DWG DATE: 18 OCT 2019
HRW NO.: 190822AW
SHEET 1 OF 4

03270 Cripple Creek Drawings_v1 PREPARED 10-16-2019.dwg
10/16/2019 12:14 PM
RVanLeuven

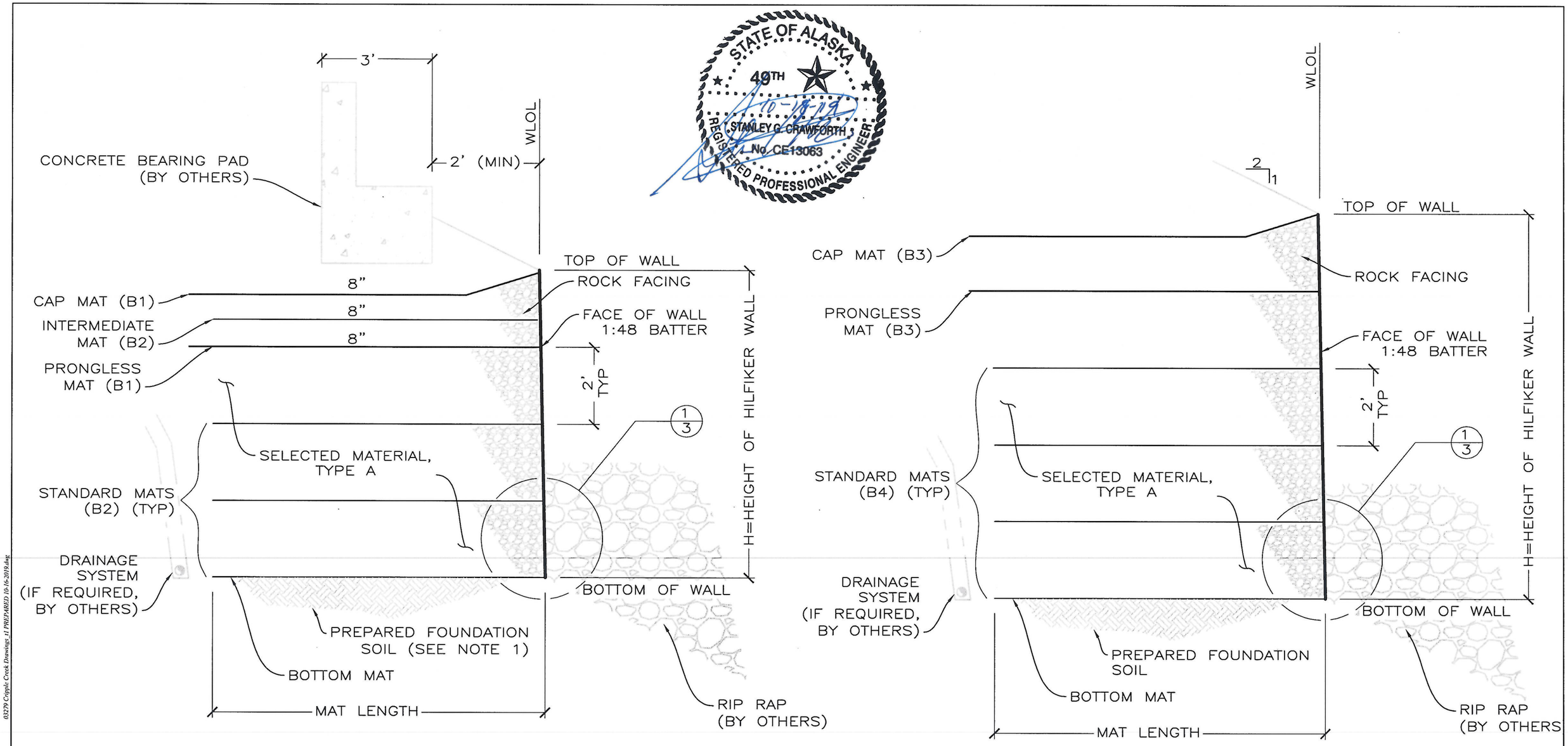

TYPICAL SECTION A/1
NOT TO SCALE

TYPICAL SECTION B/1
NOT TO SCALE

03279 Cripple Creek Drawings_t1 PREPARED 10-16-2019.dwg

10/16/2019 12:14 PM

RVanLeuven

THIS DRAWING IS FURNISHED SOLELY FOR THE USE OF OR IN CONNECTION WITH THIS PROJECT AND THE PROPRIETARY INFORMATION SHOWN HEREON IS NOT TO BE TRANSMITTED TO ANY OTHER ORGANIZATION WITHOUT SPECIFIC AUTHORIZATION BY THE HILFIKER COMPANY. HILFIKER RETAINING WALLS ARE PROTECTED BY ONE OR MORE OF THE FOLLOWING PATENTS: 243,613; 243,697; 288,616; 4,117,686; 4,329,089; 4,324,508; 4,391,557; 4,505,621; 4,343,318; 4,661,023; 4,856,939; 4,929,125; 5,076,735; 5,647,695; 5,722,799; 5,733,072; 6,357,970B1; 6,874,975B2; 7,033,118B2; AND OTHERS. OTHER PATENTS PENDING (2008)

REV.	DATE	BY	DESCRIPTION
0	10/16/2019	SGC	ISSUED FOR REVIEW
1	10/18/2019	SGC	ISSUED FOR SUBMITTAL

CADD: RGV
DESIGNED: RGV
CHECKED: SGC

HILFIKER RETAINING WALLS
1902 Hilfiker Lane
Eureka, CA 95503-5711
TOLL-FREE 800.762.8962
PH 707.443.5093 FAX 707.443.2891
WEB SITE www.hilfiker.com E-MAIL info@hilfiker.com
SINCE 1902 QUALITY PRODUCTS

AMERICAN GEO TECHNICS
American Geotechnics
5260 Chinden Blvd.
Boise, ID 83714
(208) 658-8700
Fax: (208) 658-8703

TYPICAL SECTIONS
WELDED WIRE WALL
CRIPPLE CREEK CROSSING
AK D.N.R. HEALY, AK

DWG DATE: 18 OCT 2019
HRW NO.: 190822AW
SHEET 2 OF 4

STEP 1

PLACE THE FIRST COURSE OF SOIL REINFORCEMENT MATS ON PREPARED FOUNDATION

STEP 2

PLACE THE BACKING MAT AGAINST THE INSIDE FACE OF THE SOIL REINFORCEMENT MAT. CLIP THE SECOND-TO-TOP TRANSVERSE WIRE ON THE BACKING MAT TO THE TOP TRANSVERSE WIRE ON THE SOIL FRINFORCEMENT MAT.

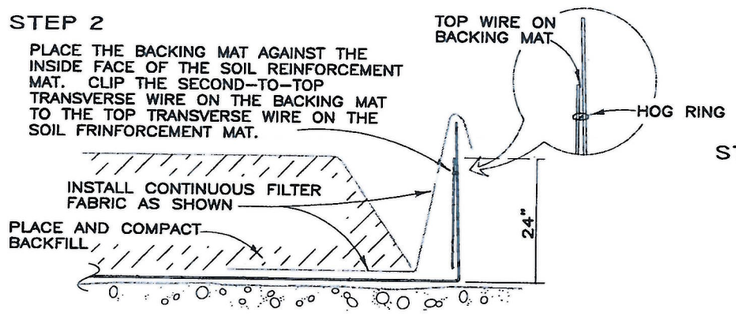

STEP 3

BRING THE FILTER FABRIC OVER THE FRONT AND TOP OF THE BACKFILL AS SHOWN. PLACE THE ROCK IN THE FACE OF THE WALL. LEAVE A VOID AS SHOWN.

PLACE THE SECOND COURSE OF SOIL REINFORCEMENT MATS WITH THE BASE LONGITUDINAL WIRES RESTING ON THE TOP TRANSVERSE WIRE OF THE BACKING MAT BELOW. SLIDE THE SOIL REINFORCEMENT MAT INTO ALIGNMENT.

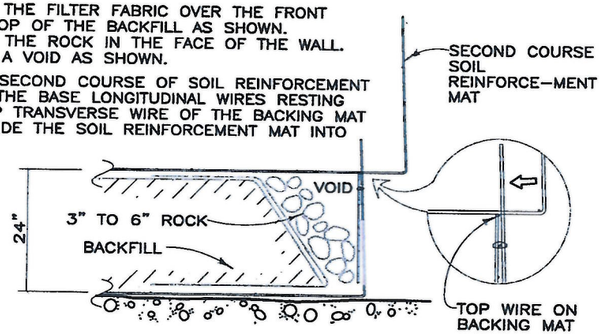

STEP 4

HOOK THE BOTTOM TRANSVERSE WIRE OF THE BACKING MAT OVER THE VERTICAL PRONGS ON THE LOWER MAT. ROTATE THE BACKING MAT TO VERTICAL AND CLIP THE SECOND-TO-TOP TRANSVERSE WIRE ON THE BACKING MAT TO THE TOP WIRE ON THE SOIL REINFORCEMENT MAT.

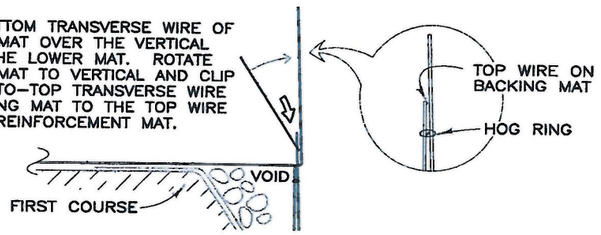

STEP 5

INSTALL THE FILTERR FABRIC AS IN STEPS 2 AND 3. PLACE AND COMPACT THE BACKFILL AND ROCK TO THE BASE ELEVATION OF THE NEXT MAT. REPEAT STEPS 2 THROUGH 5 TO THE TOP LIFT.

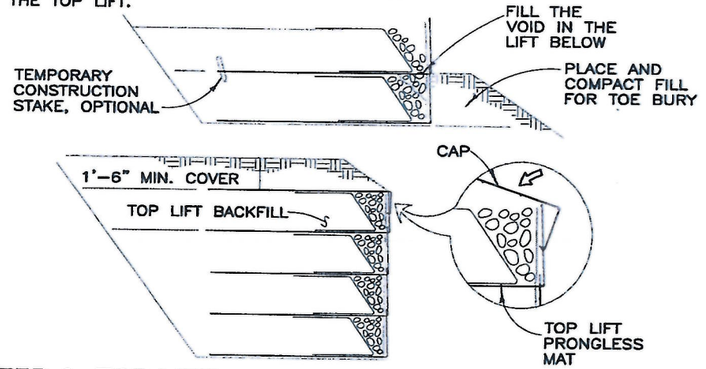

STEP 6: TOP LIFT

PLACE THE TOP LIFT PRONGLESS MAT, BACKING MAT AND FILTER FABRIC. PLACE AND COMPACT BACKFILL AND ROCK IN THE TOP LIFT. HOOK THE CAP OVER THE MIDDLE TRANSVERSE WIRE ON THE PRONGLESS MAT, AND ROTATE INTO PLACE. PLACE AND COMPACT COVER OVER TOP MAT TO 1'-6" MINIMUM DEPTH.

CONSTRUCTION SEQUENCE

NOT TO SCALE

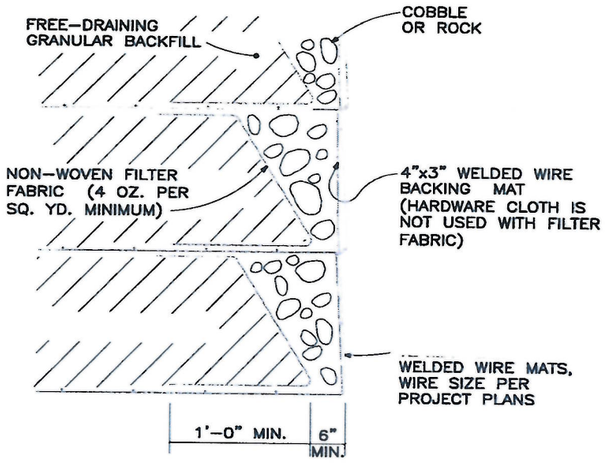

SECTION

ROCK FACING DETAIL (1/2)

NOT TO SCALE

STATE OF ALASKA
49TH
STANLEY G. CRAWFORTH
No. CE13063
REGISTERED PROFESSIONAL ENGINEER

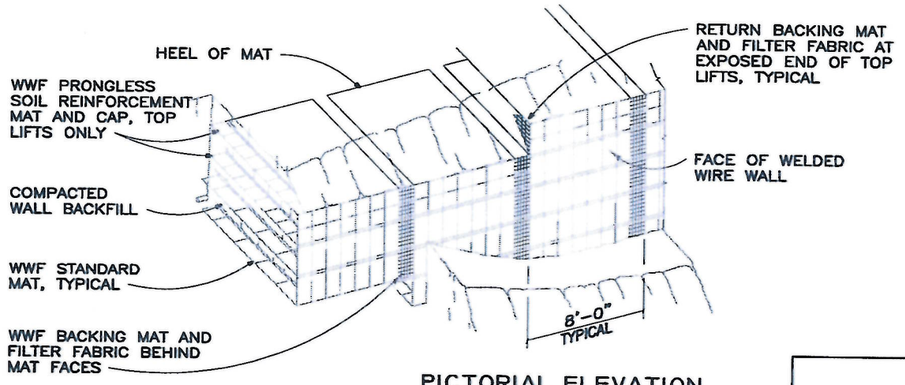

PICTORIAL ELEVATION

NOT TO SCALE

THIS DRAWING IS FURNISHED SOLELY FOR THE USE OF OR IN CONNECTION WITH THIS PROJECT AND THE PROPRIETARY INFORMATION SHOWN HEREON IS NOT TO BE TRANSMITTED TO ANY OTHER ORGANIZATION WITHOUT SPECIFIC AUTHORIZATION BY THE HILFIKER COMPANY. HILFIKER RETAINING WALLS ARE PROTECTED BY ONE OR MORE OF THE FOLLOWING PATENTS: 243,813; 243,897; 288,916; 4,117,689; 4,329,089; 4,324,506; 4,391,557; 4,505,621; 4,343,316; 4,681,023; 4,856,939; 4,929,125; 5,078,735; 5,647,695; 5,722,795; 5,733,072; 6,357,97091; 6,874,97582; 7,033,11682; AND OTHERS. OTHER PATENTS PENDING (2008)

REV.	DATE	BY	DESCRIPTION
0	10/16/2019	SGC	ISSUED FOR REVIEW
1	10/18/2019	SGC	ISSUED FOR SUBMITTAL

CADD: RGV
DESIGNED: RGV
CHECKED: SGC

HILFIKER RETAINING WALLS
1902 Hilfiker Lane
Eureka, CA 95503-5711
TOLL-FREE 800.762.8962
PH 707.443.5093 FAX 707.443.2891
WEB SITE www.hilfiker.com E-MAIL info@hilfiker.com
SINCE 1902

AMERICAN GEOTECHNICS
American Geotechnics
5260 Chinden Blvd.
Boise, ID 83714
(208) 658-8700
Fax: (208) 658-8703

CONSTRUCTION SEQUENCE
WELDED WIRE WALL
CRIPPLE CREEK CROSSING
AK D.N.R. HEALY, AK

DWG DATE: 18 OCT 2019
HRW NO.: 190822AW
SHEET 3 OF 4

03279 Cripple Creek Drawings_v1 PREPARED 10-16-2019.dwg
10/16/2019 12:14 PM
RVanLeuven

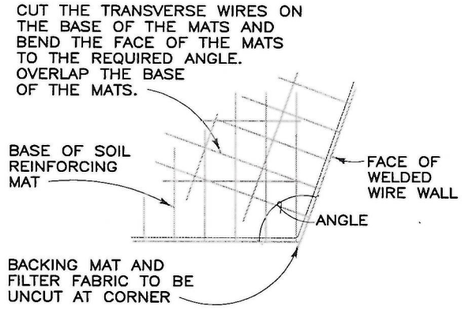

PLAN VIEW

OBTUSE CONVEX ANGLE

NOT TO SCALE

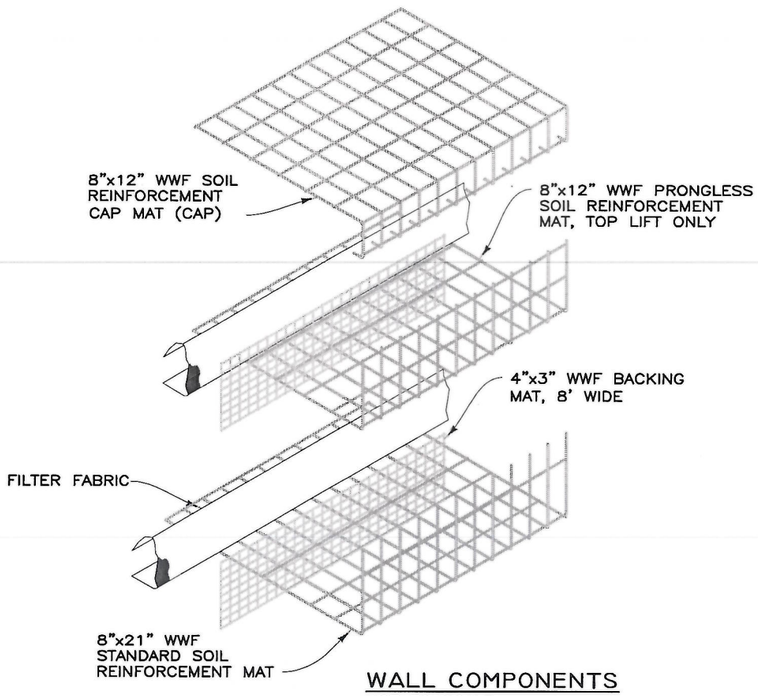

WALL COMPONENTS

NOT TO SCALE

DESIGN NOTES:

1. ALL MATERIALS SHALL BE FURNISHED AND PLACED IN ACCORDANCE WITH ADOT STANDARD SPECIFICATION AND THE PROJECT SPECIFICATIONS, UNLESS OTHERWISE SPECIFIED IN THE SPECIFICATIONS PROVIDED BY HILFIKER RETAINING WALLS.

2. FOR THE CONCRETE BEARING PAD SUPPORTING THE SUPERSTRUCTURE, THE MAXIMUM ALLOWABLE VERTICAL STRESS ON THE AGGREGATE IS 7,000 PSF.

3. DESIGN PARAMETERS ASSUMED FOR DESIGN:

MATERIAL	FRICTION	COHESION	UNIT WEIGHT
REINFORCED BACKFILL	34 DEG.	0 PSF	130 PCF
RETAINED SOIL	30 DEG.	0 PSF	125 PCF
FOUNDATION SOIL	30 DEG.	0 PSF	120 PCF
SEISMIC ACCELERATION	0.436 PGA		

4. NON-SATURATED BACKFILL IS REQUIRED. CONTRACTING AGENCY SHALL PROVIDE ESSENTIAL SURFACE AND SUBSURFACE DRAINAGE CONTROLS, AS REQUIRED, TO PREVENT ADVERSE HYDROSTATIC PRESSURE.

5. CORROSION DESIGN IS 75 YEARS FOR HOT DIPPED GALVANIZED STEEL REINFORCEMENTS. REINFORCED BACKFILL MATERIALS SHALL MEET NON-AGGRESSIVE ELECTRO-CHEMICAL REQUIREMENTS FOR BACKFILL, AS DEFINED IN THE AASHTO BRIDGE DESIGN SPECIFICATIONS (LATEST EDITION).

6. THE SPECIFICATIONS, DRAWING NOTES AND CALCULATIONS PRESENTED IN THIS WALL SUBMITTAL PACKAGE ARE AN INTEGRAL PART OF THE HILFIKER WALL CONSTRUCTION PLANS.

7. THE CONTRACTOR IS RESPONSIBLE FOR ESTABLISHING THE WALL LAYOUT LINE (WLOL) FROM THE REFERENCE LINE AND LOCATION INFORMATION PROVIDED IN THE CONTRACTING AGENCY'S PLANS.

8. SEE THE HILFIKER RETAINING WALLS INSTALLATION GUIDE FOR MATERIALS HANDLING AND CONSTRUCTION.

THIS DRAWING IS FURNISHED SOLELY FOR THE USE OF OR IN CONNECTION WITH THIS PROJECT AND THE PROPRIETARY INFORMATION SHOWN HEREON IS NOT TO BE TRANSMITTED TO ANY OTHER ORGANIZATION WITHOUT SPECIFIC AUTHORIZATION BY THE HILFIKER COMPANY. HILFIKER RETAINING WALLS ARE PROTECTED BY ONE OR MORE OF THE FOLLOWING PATENTS: 243,813; 243,897; 288,616; 4,117,686; 4,329,089; 4,324,508; 4,391,557; 4,505,621; 4,343,318; 4,681,023; 4,856,936; 4,929,125; 5,076,735; 5,647,695; 5,722,799; 5,733,072; 8,357,970B1; 8,874,975B2; 7,033,118B2; AND OTHERS. OTHER PATENTS PENDING (2008)

REV.	DATE	BY	DESCRIPTION
0	10/16/2019	SGC	ISSUED FOR REVIEW
1	10/18/2019	SGC	ISSUED FOR SUBMITTAL

CADD: RGV

DESIGNED: RGV

CHECKED: SGC

HILFIKER RETAINING WALLS
1902 Hilfiker Lane
Eureka, CA 95503-5711
TOLL-FREE 800.762.8962
PH 707.443.5093 FAX 707.443.2891
WEB SITE www.hilfiker.com E-MAIL info@hilfiker.com

AMERICAN GEO TECHNICS
American Geotechnics
5260 Chinden Blvd.
Boise, ID 83714
(208) 658-8700
Fax: (208) 658-8703

DETAIL & DESIGN NOTES

WELDED WIRE WALL

CRIPPLE CREEK CROSSING

AK D.N.R. HEALY, AK

DWG DATE: 18 OCT 2019

HRW NO.: 190822AW

SHEET 4 OF 4

10/16/2019 12:14 PM
03279 Cripple Creek Drawings_11 PREPARED 10-16-2019.dwg
RVanLeuven